DocuSign Envelope ID: C0686043-42A4-4AE1-AE65-6E4A0C906136

PROJECT REFERENCE NO.	SHEET NO.
17BP.14.R.122	2B-3

STATE OF
NORTH CAROLINA
DEPT. OF TRANSPORTATION
DIVISION OF HIGHWAYS
RALEIGH, N.C.

SPECIAL DETAIL FOR
GUARDRAIL PLACEMENT
25'-0" CLEAR SPAN

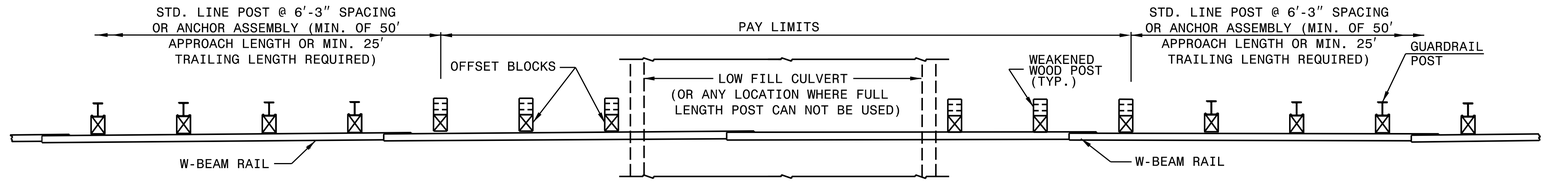

PLAN

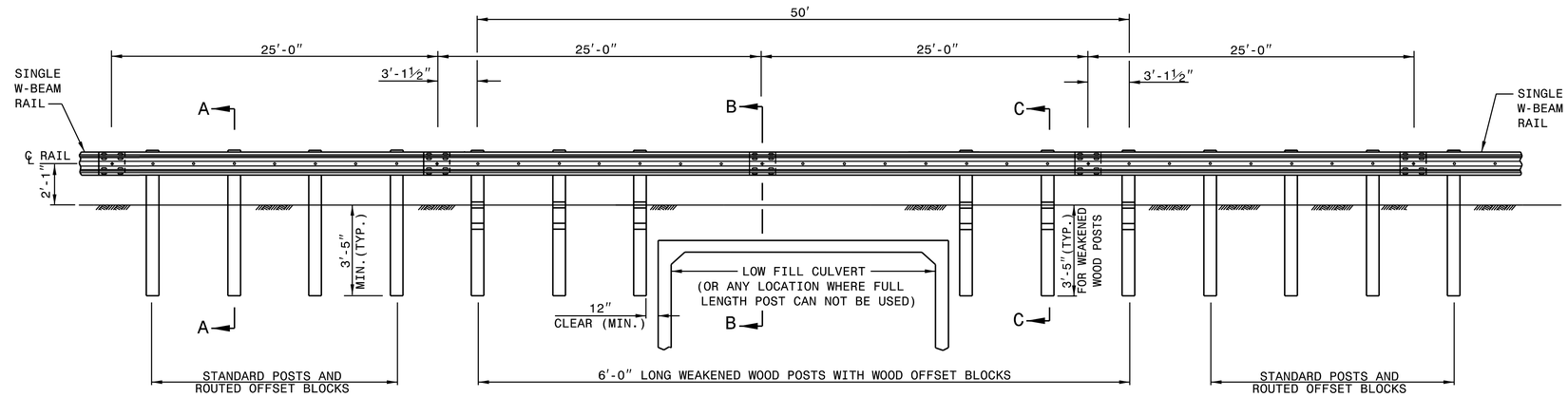

ELEVATION
25'-0" GUARDRAIL SPAN

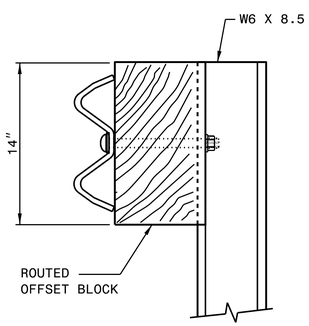

SECTION A-A

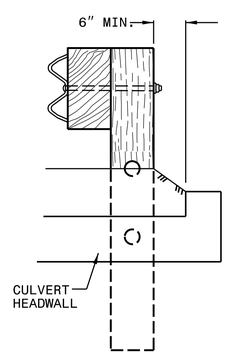

SECTION B-B

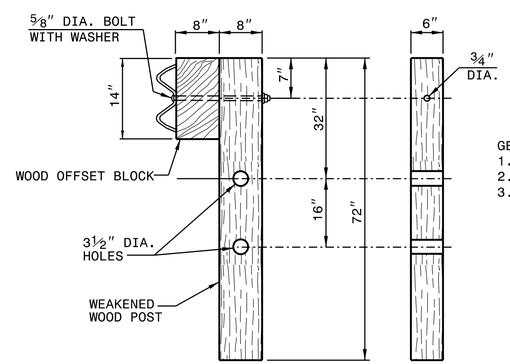

SECTION C-C **FRONT**
WEAKENED WOOD POST

GENERAL NOTES:
1. LAP RAIL IN THE DIRECTION OF TRAFFIC FLOW.
2. SEE ROADWAY PLANS FOR LOCATIONS AND CONTINUATION OF RAIL OR END SECTIONS.
3. MINIMUM DISTANCE OF 5 FEET BEHIND THE GUARDRAIL SHOULD BE CLEAR OF ANY FIXED-OBJECT HAZARDS THAT COULD SNAG AN IMPACTING VEHICLE.

SHEET - OF -
862D01

STATE OF
NORTH CAROLINA
DEPT. OF TRANSPORTATION
DIVISION OF HIGHWAYS
RALEIGH, N.C.

SPECIAL DETAIL FOR
GUARDRAIL PLACEMENT
25'-0" CLEAR SPAN

SHEET - OF -
862D01

NORTH CAROLINA PROFESSIONAL SEAL 022966 ENGINEER JOEL S. HOWERTON
DocuSigned by: Joel S. Howerton
3/27/2018

CONTRACTS STANDARDS AND DEVELOPMENT UNIT
Office 919-707-6950 FAX 919-250-4119

25'-0" CLEAR SPAN GUARDRAIL PLACEMENT

ORIGINAL BY: _____ DATE: _____
MODIFIED BY: _____ DATE: _____
CHECKED BY: _____ DATE: _____
FILE SPEC.: _____

DOCUMENT NOT CONSIDERED FINAL UNLESS ALL SIGNATURES COMPLETED